PROPRIETARY AND CONFIDENTIAL
THE INFORMATION CONTAINED IN THIS DRAWING IS THE SOLE PROPERTY OF UNICE E-O SERVICES INC. ANY REPRODUCTION IN PART OR AS A WHOLE WITHOUT THE WRITTEN PERMISSION OF UNICE E-O SERVICES INC IS PROHIBITED.

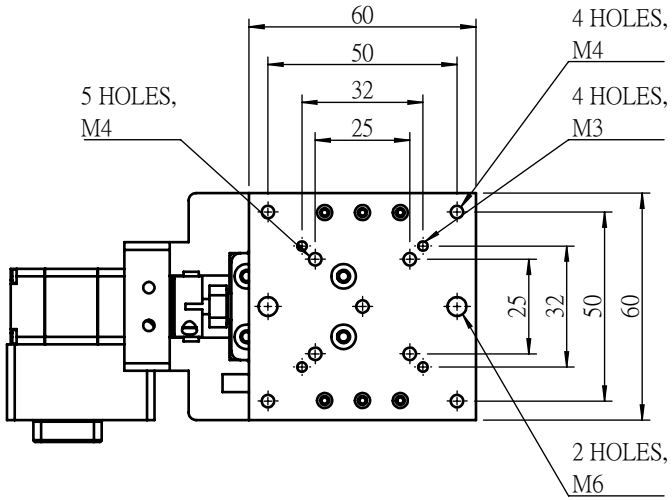

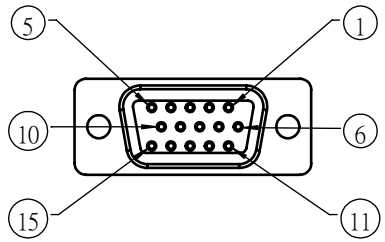

NO	Description
1	N/A
2	COM
3	+Limit
4	-Limit
5	N/A
6	/A
7	A
8	/B
9	B
10	COM
11	N/A
12	N/A
13	N/A
14	N/A
15	N/A

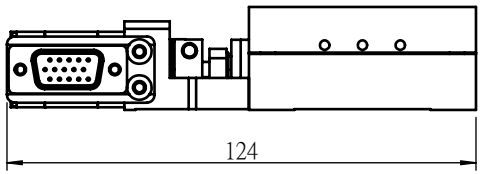

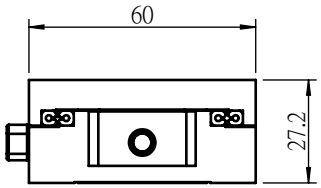

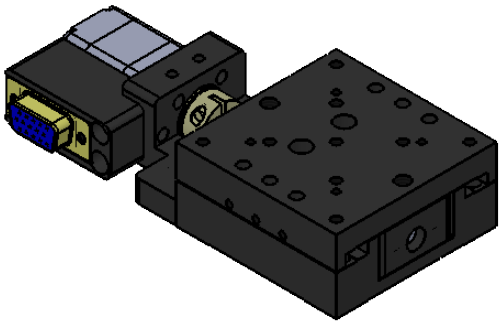

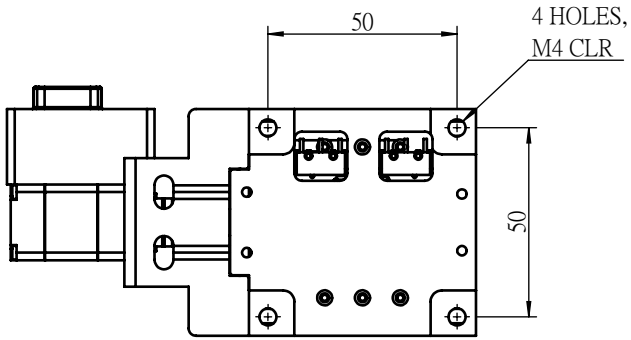

UNIT:m/m

Unice E-O Services Inc. No.5, Andong Rd., Chung Li District, Taoyuan City 32063, Taiwan, R.O.C.			TITLE:	08MLS-025M
			DWG. NO.	08MLS-025M
	NAME	DATE	MATERIAL:	N/A
DRAWN	Sky	2018/3/27		
ENG APPR.	Johnny	2018/3/27	SCALE:	1:2
		2018/03/27	REV	0