PROPRIETARY AND CONFIDENTIAL
THE INFORMATION CONTAINED IN THIS DRAWING IS THE SOLE PROPERTY OF UNICE E-O SERVICES INC. ANY REPRODUCTION IN PART OR AS A WHOLE WITHOUT THE WRITTEN PERMISSION OF UNICE E-O SERVICES INC IS PROHIBITED.

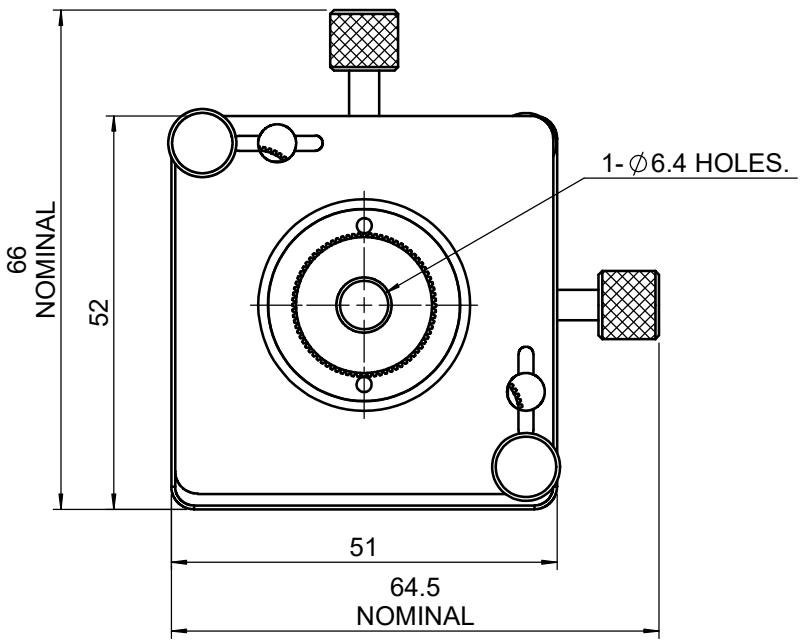

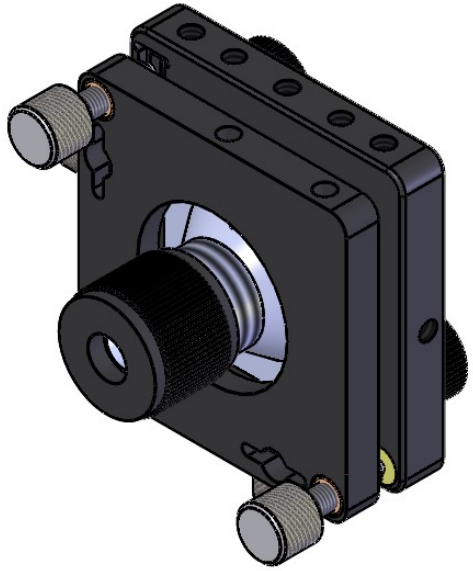

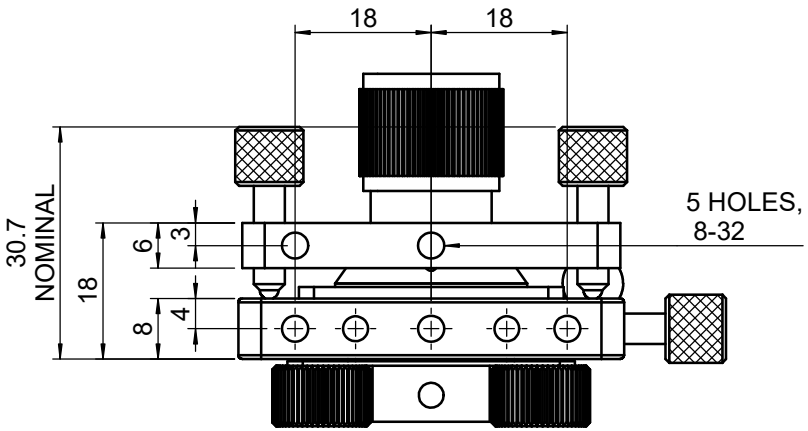

UNIT:m/m

Unice E-O Services Inc. No.5, Andong Rd., Chung Li District, Taoyuan City 32063, Taiwan, R.O.C.			TITLE:	06PFC-2
			DWG. NO.	06PFC-2
	NAME	DATE	MATERIAL:	N/A
DRAWN	Sammy	2014/04/10		
ENG APPR.	Johnny	2014/04/10	SCALE:	1:1
			REV	0